Drop-in Circulator

FCR20D2 1390-1450MHz

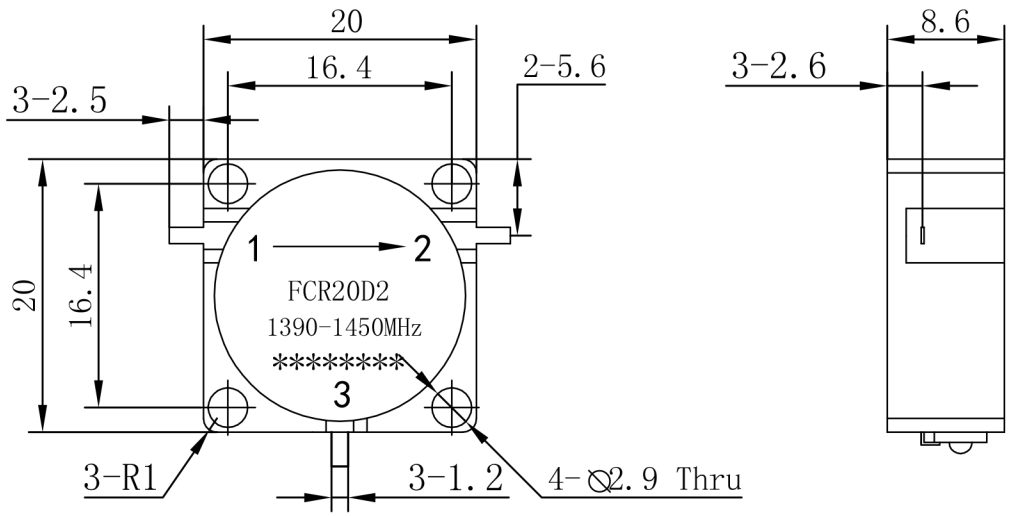

Item	Unit	Specification	Note
Freq.Range	MHz	1390-1450	
Direction		CW/Right	
Operating Temperature	℃	-25～+70	
Insertion Loss	dB max	0.40	Room Temp (+25℃±10℃)
	dB max	0.40	Over Temp (-25℃～+70℃)
Isolation	dB min	20	Room Temp (+25℃±10)
	dB min	20	Over Temp (-25℃～+70℃)
VSWR	MAX	1.20	Room Temp (+25℃±10)
	MAX	1.20	Over Temp (-25℃～+70℃)
Avg Power	W	50	
Impedance	Ω	50	

Customer suggestion and confirmation:

Signature: Date:

Note:
1.Tolerances: ±0.20mm
2.Material
BODY: Steel
TAB: BeCu
3.Surface Treatment
BODY: Nickel plate
TAB: Silver Plated

	Format	Scale	Version
Design: Colin	A4	1:1	A
	Page 1,Total 1		
Date: 2019.3.4			Unit: mm

www.winnsky.com