Coaxial Circulator

FCR16CSKKK 5800-6400MHz

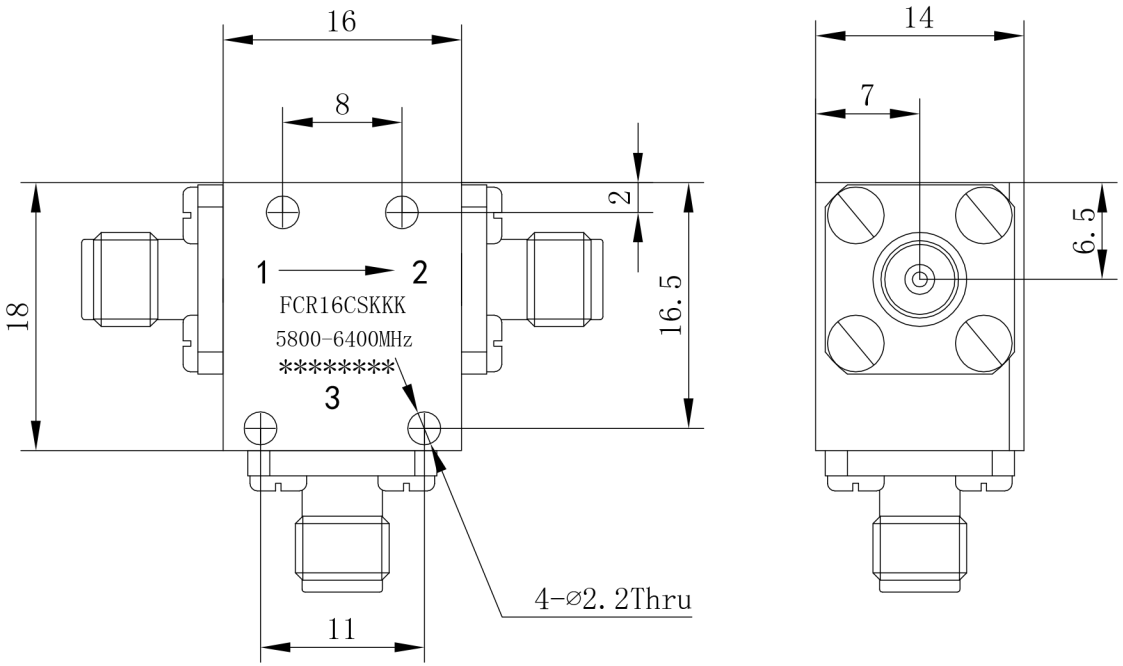

Item	Unit	Specification	Note
Freq.Range	MHz	5800-6400	
Direction		CW/Right	
Operating Temperature	℃	-40～+85	
Insertion Loss	dB max	0.50	Room Temp (+25℃±10℃)
	dB max	0.50	Over Temp (-40℃～+85℃)
Isolation	dB min	23	Room Temp (+25℃±10)
	dB min	23	Over Temp (-40℃～+85℃)
Return Loss	dB min	23	Room Temp (+25℃±10)
	dB min	23	Over Temp (-40℃～+85℃)
Avg Power	W	30	
Impedance	Ω	50	

Customer suggestion and confirmation:

Signature: Date:

Design: Colin	Format	Scale	Version
	A4	1:1	A
Date: 2016.7.11	Page 1,Total 1		
			Unit: mm

www.winnsky.com

Note:
1.Tolerances: ±0.10mm
2.Material
BODY: Steel TAB: BeCu